Current part is item (8) on diagram. Available at www.oshkoshequipment.com

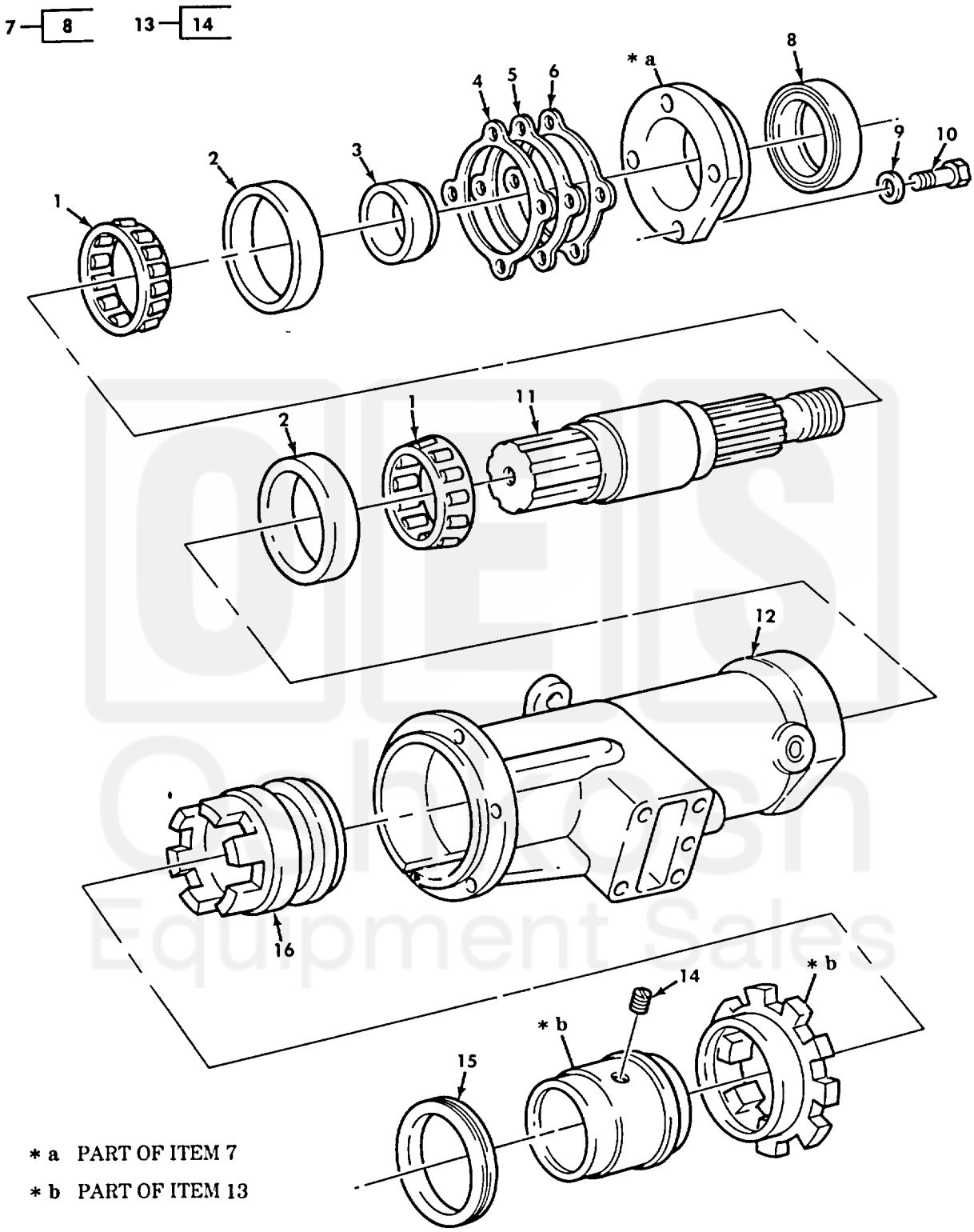

Figure 527. Transfer Power Takeoff Main Shaft and Drive Couplings.

Current part is item (8) on diagram. Available at www.oshkoshequipment.com

Current part is item (8) on diagram. Available at www.oshkoshequipment.com

(1) ITEM NO	(2) SMR CODE	(3) NSN	(4) CAGEC	(5) PART NUMBER	(6) DESCRIPTION AND USABLE ON CODES (UOC)	(7) QTY
					GROUP 2004 POWER TAKEOFF ASSEMBLY	
					FIG. 527 TRANSFER POWER TAKEOFF MAIN SHAFT AND DRIVE COUPLINGS	
1	PAFZZ	3110001875730	78500	LM102949	CONE AND ROLLERS, TA ..... UOC:DAL, V1B, ZAL	2
2	PAFZZ	3110001712489	78500	LM102910	CUP, TAPERED ROLLER ..... UOC:DAL, V18, ZAL	2
3	PAFZZ	2520011326847	78500	1844-J-634	SLEEVE, OIL SEAL ..... UOC:DAL, V18, ZAL	1
4	PAFZZ	5365006143903	78500	2803-L-220	SHIM ..... UOC:DAL, V18, ZAL	1
5	PAFZZ	5365005453723	78500	2803-M-221	SHIM, REAR ..... UOC:DAL, V18, ZAL	1
6	PAFZZ	5365005186592	19207	5186592	SHIM ..... UOC:DAL, V18, ZAL	1
7	PAFZZ	3110011429490	78500	A3266-Q-745	PLATE, RETAINING, BEA ..... UOC:DAL, V18, ZAL	1
8	PAFZZ	5330011260565	78500	A-1205-U-1633	.SEAL ..... UOC:DAL, V18, ZAL	1
9	PAFZZ	5310012009879	78500	1229-E-1669-C	WASHER, FLAT ..... UOC:DAL, V18, ZAL	4
10	PAFZZ	5306011261618	78500	S-256-1-C	BOLT, MACHINE ..... UOC:DAL, V18, ZAL	4
11	XAFZZ		78500	3297-C-55	SHAFT, POWER TAKEOFF ..... UOC:DAL, V18, ZAL	1
12	XAFZZ		78500	3282-K-63	HOUSING, PTO ..... UOC:DAL, V18, ZAL	1
13	PAFZZ	2520011341839	78500	A3107-B-28	COLLAR AND GEAR ASS ..... UOC:DAL, V18, ZAL	1
14	PAFZZ	5305011422792	78500	S-853	.SETSCREW ..... UOC:DAL, V18, ZAL	1
15	PAFZZ	5330011374799	78500	1205-Y-1663	SEAL, PACKING ..... UOC:DAL, V18, ZAL	1
16	PAFZZ	2520011235556	78500	3107-V-22	COLLAR, SLIDING CLUT ..... UOC:DAL, V18, ZAL	1

Current part is item (8) on diagram. Available at www.oshkoshequipment.com